FQI60KD



Product Family	Refrigerator
Installation	Free Standing
Category	4 Doors
Reference width	Higher than 80 cm
Reference height	160 - 200 cm
No-Frost system	Yes
Cooling type	No frost
Defrost	Automatic
Hinge type	Standard
EAN code	8017709342128

Aesthetics

Aesthetics	Universal	**Side material**	Steel
Colour	Dark Inox Look	**Side colour**	Black
Design	Flat	**Logo**	Applied
Finishing	Fingerproof	**Door shelves profile colour**	Silver
Material	Steel Effect	**Drawers profile colour**	Silver
Handle	Integrated	**Colour of glass shelf profile**	Silver
Handle type	Fixed	**Display**	LED
Handle colour	Black	**Display position**	External (on door)
Logo colour	Chrome		

Refrigerator compartment features

Number of compartments	3	**No. of lights**	2
Compartment types	Fruit and vegetable compartment, Variable temperature compartment - 3°/0°/3°C	**Convertible temperature drawer**	Yes
		Internal light in fridge	Yes
		Type of internal light (fridge)	LED
Crisper Cover	Yes		
Type of crisper/vegetable drawers cover	Glass		

Refrigerator Inner Door

Number of adjustable door shelves	4	**No. of bottle shelves**	2

Other Refrigerator features



MultiFlow	Metal

Freezer compartment features

Number of drawers	4	**Internal light in freezer**	Yes
No. of shelves	2	**Type of internal light (freezer)**	LED
No. of lights	2	**Type of shelves**	Plastic

Other Freezer features



Fast freezing compartment	Yes

Other technical features



Functions display	Holiday, Fast freezing, Fast cooling, MultiZone, ECO
MultiZone	Yes
Fast freezing button	Yes
Door open alarm	Yes
Type of temperature control	Electronic
No. of compressors	1
Refrigerant gas type	R600a
Type of compressor	Inverter
Foam agent	Cyclopentane

Performance / Energy Label



Annual energy consumption	255 kWh/year	**Noise level**	39 dB(A) re 1 pW
Energy efficiency class	D	**Thaw time**	11 h
Airborne acoustical noise emission class	C	**4 star - Freezing capacity**	13.0 kg/24h
Total volume	522 l	**Climatic class**	SN, N, ST
Sum of the volumes of the frozen compartment(s)	179 l	**EEI**	80 %

Sum of the volumes of the chill compartment(s) and the unfrozen compartment(s)	343 l

Electrical Connection

Nominal power	180 W	**Frequency (Hz)**	50 Hz
Current	1.5 A	**Power supply cable length**	180 cm
Voltage (V)	220-240 V	**Plug**	(F;E) Schuko

Logistic Information

Width (mm)	910 mm	**Product width with maximum doors opening**	1515 mm
Depth without handle	690 mm	**Product depth with handle**	690 mm
Product Height with feet	1905 mm	**Product depth with doors open at 90°**	1062 mm

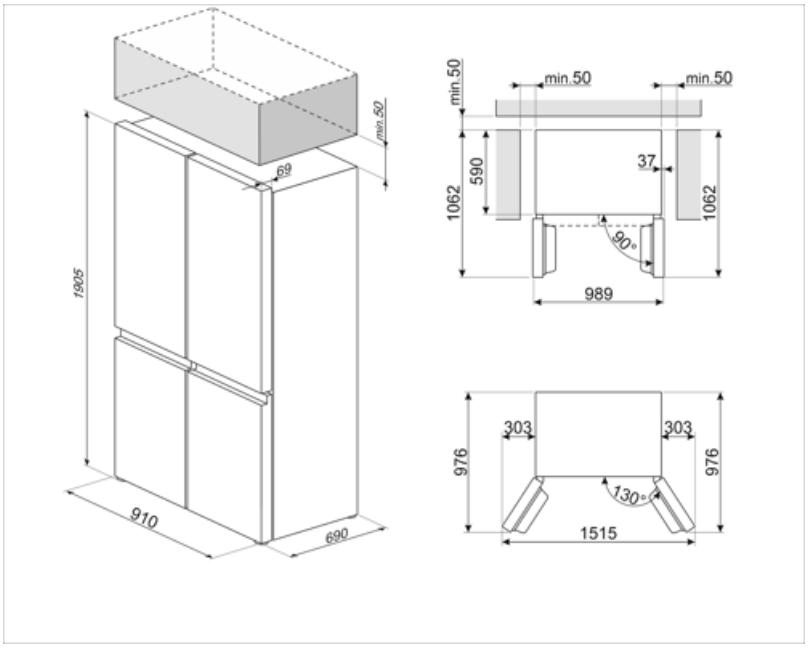

Symbols glossary



The automatic defrost system works by automatically defrosting at regular intervals eliminating the need to defrost altogether.



LED display: to show programmes, functions and options selected and the time to the end of the cycle.



Fast freezing: The fast freezing function brings the temperature of the compartment down when activated a few hours prior to usage.



LED interior lighting: is a more energy efficient and long lasting way of illuminating the interior of the appliance.



Inverter technology: The evolution of Smeg's driers towards more intelligent and environmentally sustainable models has led to the choice of using Inverter technology with heat pumps, which reduces significantly energy consumption.



Energy efficiency class D



Economical mode: Analyzes fridge functioning during the activation and optimizes the operating cycle in order to reduce power consumption.



Power saving mode: The power saving mode allows you to disable the refrigerator and keep the freezer working.



Multiflow Cooling System: the Multiflow ventilation system allows an even distribution of cool air around the fridge cabinet. The stainless steel panel gives a more premium look to the appliance.



Multizone: Multizone compartment can be used as a refrigerator or a freezer compartment. Depending on your needs and eating habbits, you can select settings, program the temperature using.